NOTES :
1 . Material : C1720 1/2H 0.10 T
2 . The tolerance is ± 0.2 mm
3 . Dimension : 2.5(W)X4.5(L)X6.0(H)
4 . Plated : Au Plated

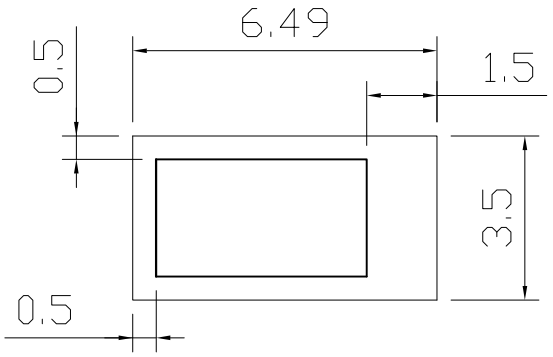


PCB Layout Recommend

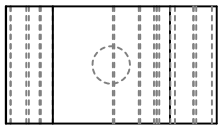

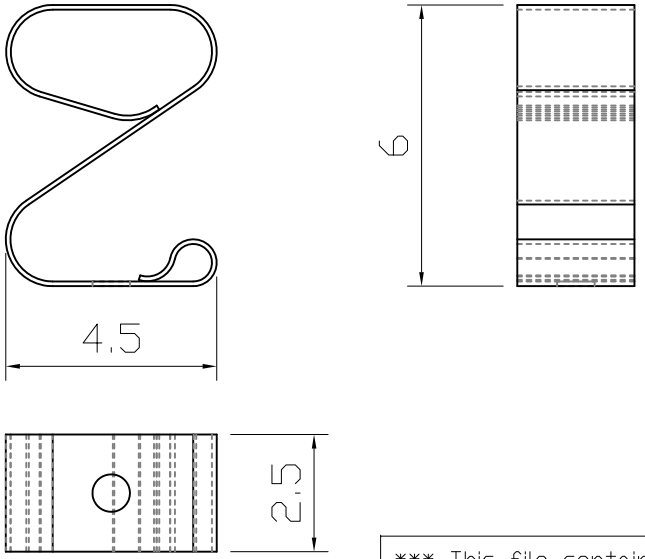


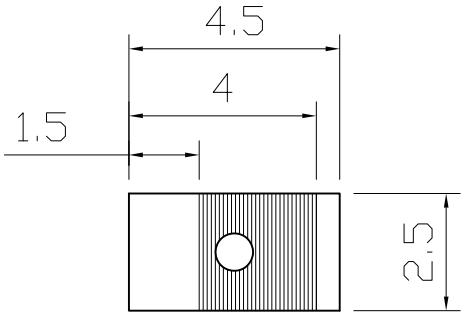


SOLDER PAD DIMENSION

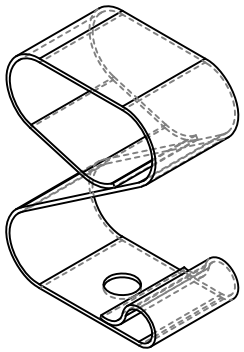

3D View

*** This file contains confidential information intended for a specific individual and purpose,and is protected by law, if you are not the intended recipient,you shouldn't own this file and are hereby notified that any disclosure,copy,or distribution of this data,or the talking of any action based on it,are strictly prohibited.

| | | | | |
|---|---|---|---|---|
| APPD: | Q'TY: | ALINK PRECISION CO.,LTD. | | ALINK P/N: 5G2545060B |
| DR: | SCALE: 1 : 1 | | | Customer P/N : |
| CHKD: Simon | REV: A1 / UNIT: mm | Customer : | | ALINK |
| Draw by: Blues | | MAT'L: C1720 1/2H 0.10 T | Plate: Au Plated | |